ANDELA Products

AGB-06HD System

5 TPH Capacity

Efficient Size Reduction

Flexible Impact Hammers

Product Destruction

Glass Cullet Processing

Commingled Container Processing & Separation

Model:
AGB-06 System

Reduces waste
Provides a cost effective remedy for environmentally conscious communities

ANDELA PRODUCTS

493 State Route 28

Phone: (315) 858-0055
Fax: (315) 858-2669

www.andelaproducts.com
info@andelaproducts.com

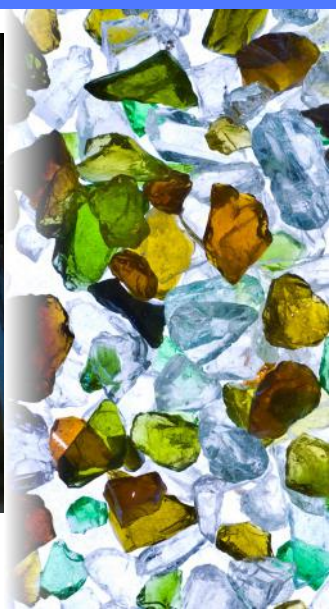

- The Andela AGB-06HD Glass-Crusher is used for glass cullet production or to efficiently reduce and separate mixed glass from a commingled mix of glass, plastic and aluminum.
- The flexible impact hammers will liberate and crush glass, ceramics and other breakable materials.
- With abrasion resistant materials to endure the rigors of glass processing.
- Also available as a single unit **(See Equipment Page)**

- **Simple to operate and maintain**
- **Low power requirements for significant size reduction**
- **Will process a mix of glass and other materials**
- **Big machine features with a small machine price**
- **Heavy duty construction**

ITEM	DESCRIPTION	MOTOR QTY.	MOTOR SIZE
1	INFEED CONVEYOR	2 HP	2 HP
2	AGB6 BREAKER	2 HP	7.5 HP

NOTES:
1) SPECIFY ELECTRICAL REQUIREMENTS FOR SYSTEM:
   PHASE :_____ INITIALS:_____
   VOLTAGE :_____ INITIALS:_____
   FREQUENCY :_____Hz INITIALS:_____
2) ALL DIMENSIONS ARE REFERENCE DIMENSIONS AND MAY VARY PER CUSTOMERS SPECIFICATIONS

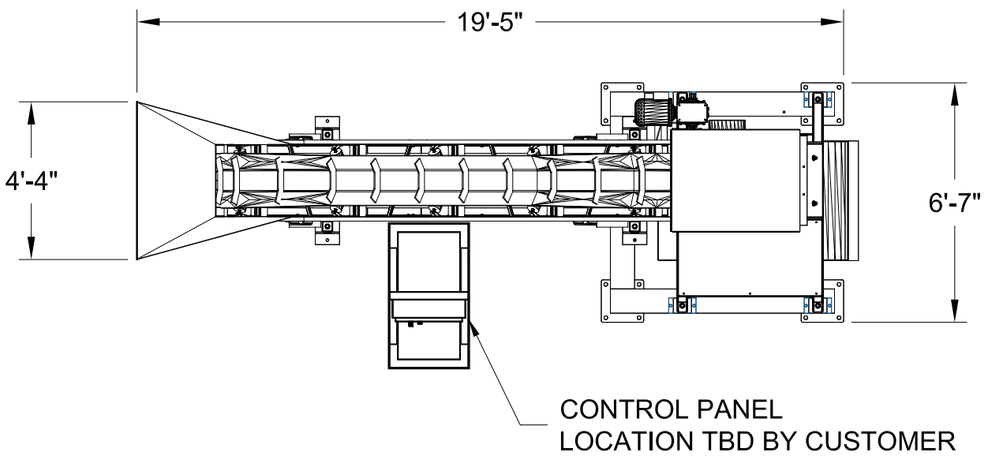

NOTE
DETAILING, PRODUCTION, AND COMPONENT PURCHASING WILL NOT BEGIN UNTIL ONE (1) SET OF DRAWINGS HAS BEEN APPROVED, SIGNED, AND RETURNED TO ANDELA PRODUCTS

APPROVAL
BY (PRINT)_____
BY (SIGN)_____
DATE _____
AS NOTED. _____

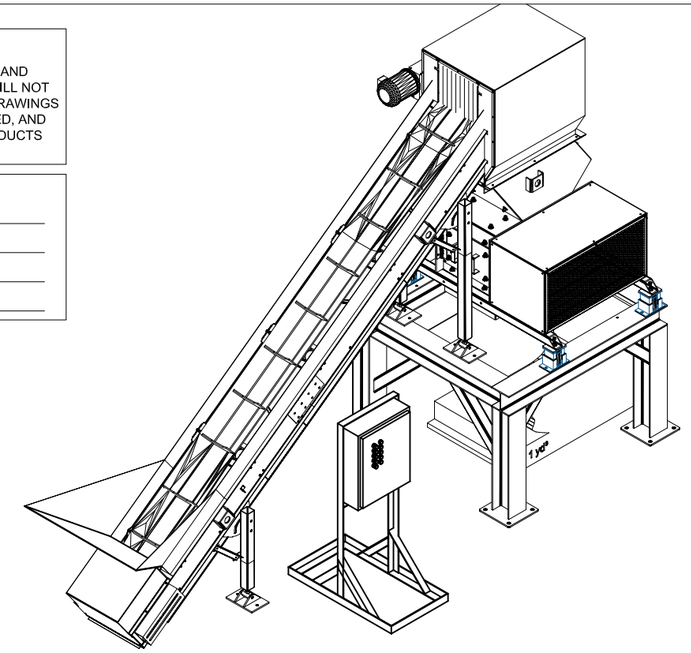

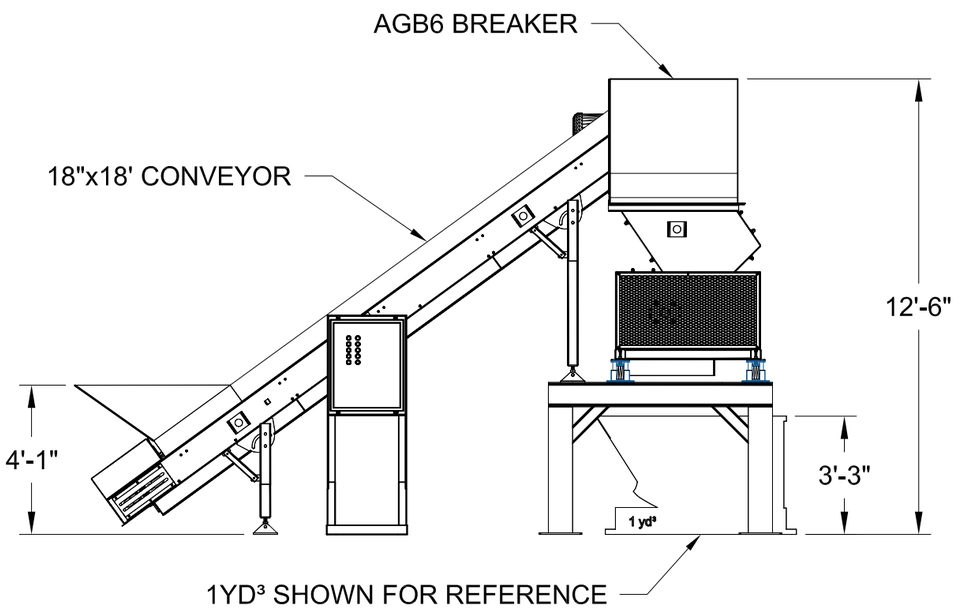

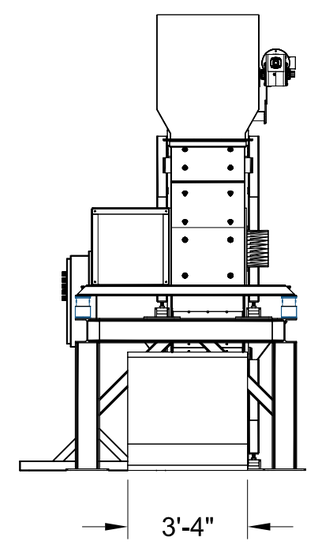

ANDELA Products

493 State Route 28
Richfield Springs, NY 13439

tel: 315-858-0055
fax: 315-858-2669

DRAWN	VTB
DATE	8/9/16
CHECKED	....
DATE	....
SCALE	1:40

AGB6 SYSTEM LAYOUT

...

REVISION	DATE
. .	. .

FILE NO
SYS-03
SHEET 1 OF 1

ANDELA Products

AGB-06HD

5 TPH

Efficient Size Reduction

Flexible Impact Hammers

Product Destruction

Glass Cullet Processing

Commingled Container Processing & Separation

Model:

AGB-06: 5 TPH

Reduces waste
Provides a cost effective remedy for environmentally conscious communities

ANDELA PRODUCTS

493 State Route 28

Phone: (315) 858-0055
Fax: (315) 858-2669

www.andelaproducts.com
info@andelaproducts.com

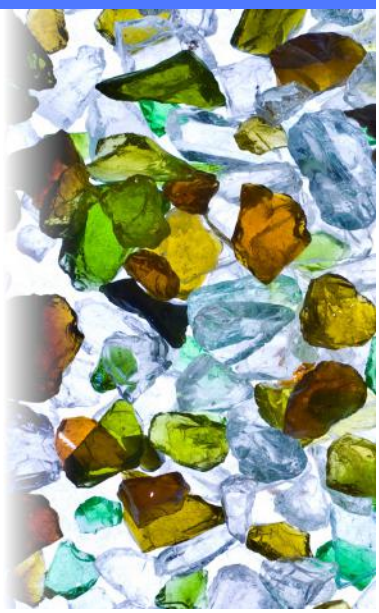

- The Andela AGB-06HD Glass Crusher is used for glass cullet production or to efficiently reduce and separate mixed glass from a commingled mix of glass, plastic and aluminum.
- The flexible impact hammers will liberate and crush glass, ceramics and other breakable materials.
- Specifically designed, engineered, and outfitted with select abrasion resistant materials to endure the rigors of glass processing.
- Also available as a system **(See Systems Page)**

- **Simple to operate and maintain**
- **Low power requirements for significant size reduction**
- **Will process a mix of glass and other materials — selective size reduction**
- **Big machine features with a small machine price**
- **Heavy duty construction**

ANDELA Products
493 State Route 28 · Richfield Springs, NY · PHONE: (315) 858-0055 · FAX: (315) 858-2669
website: www.andelaproducts.com email: info@andelaproducts.com

ANDELA BREAKER MODEL AGB-06HD

The Andela Breaker is ideally suited to many applications because of its durability, flexibility, and design. This equipment is unique in its ability to successfully process a broad range of items using a technology that selectively reduces certain material while leaving others whole.

MACHINE SPECIFICATIONS

Dimensions

Overall Length ..... 51”
Overall Width ..... 79”
Overall Height ..... Variable
Hopper Input Opening ..... 36” x 24”
Frame Construction ..... Welded Steel with
1/4” to 3/4” Thick Abrasion Resistant Replaceable Bolt In Steel Liner Plates
Heavy Duty Frame with Vibration Isolation
(4) Mechanical Spring Isolators

Drive Componentry

Motor Size ..... (1) 7.5 hp
Solid Steel Shaft Diameter ..... 2-1/2”
Number of Hammers 20
Hammer Type ..... Heavy Duty Flailing Arm of Through Hardened Steel
Bearing Size ..... 2-1/2”

Safety and Maintenance Features

Protective Guards ..... Cover Input Drive Unit and Bearings
Access Door .....Removable Panels for Hammer and Liner Maintenance

Electrical

Motor Voltage ..... 230/460VAC, 60 HZ, 3 Phase
(or to customer specifications)

The manufacturer reserves the right to change designs
and specifications without notice.

ANDELA Products

SURGE HOPPER

Evenly Distributes Material

Essential for Bulk Loading

Models:

AMSH86-12

AMSH86-18

AMSH86-24

Environmentally friendly
Reduces waste
Provides cost effective remedy for environmentally conscious communities

ANDELA PRODUCTS

493 State Route 28
Richfield Springs, NY 13439

Phone: (315) 858-0055
Fax: (315) 858-2669

www.andelaproducts.com
info@andelaproducts.com

- The Andela Metering Surge Hopper is designed to accept bulk loading of glass or other materials
- Holds 4 cubic yards, or up to 6 cubic yards with optional flared extensions (shown in picture)
- Reciprocating plate feeder meters the flow rate of material into the system
- Adjustable slide gate regulates whole, or mixed broken glass to desired throughput

- **Simple to Operate & Maintain**
- **Easy Installation**
- **Reasonably Priced**
- **Heavy Duty Construction**
- **12”, 18”, or 24" wide Discharge**
- **Abrasion Resistant Materials on All Wear Surfaces**

ANDELA Products
493 State Route 28 · Richfield Springs, NY · PHONE: (315) 858-0055 · FAX: (315) 858-2669
website: www.andelaproducts.com email: info@andelaproducts.com

ANDELA METERING SURGE HOPPER
MODEL AMSH86–18

MACHINE SPECIFICATIONS

Dimensions

Capacity	4 cubic yrds.
Overall Length	105”
Overall Width	81”
Overall Height	89”
Discharge Opening	12” wide x Adjustable Height
Discharge Height	40”

Drive Componentry

Motor Size	(1) 1.5 hp
Direct Drive System	Totally Enclosed Gear Reducer
	Reciprocating Plate with Eccentric Drive

Electrical

Motor Voltage	230/460 VAC,60 HZ, 3 Phase
Controls	Push Button Start/Stop

Selected surfaces lined with abrasion resistant steel for long wear and durability.
Hopper completely lined with abrasion resistant steel for long wear and durability.

The manufacturer reserves the right to change designs
and specifications without notice.

ANDELA Products

TROMMEL SCREENER

30" & 48" diameters

6ft—15ft long

1.5 HP—7.5 HP

3 material separations

1 or 2 aggregate sizes

1 oversize / residual

The Andela Trommel Screen Separator is designed to separate and size aggregate using woven wire mesh or perforated plate.

Our trommels feature direct drive systems flexibly mounted with totally enclosed gear reducers for long lasting performance.

Comes equipped with rotating brushes for cleaning the screens.

Customizable chutes build to customer specification.

- Simple to operate and maintain
- Easy Installation
- Reasonably priced
- Durable
- Totally enclosed with easy access doors
- Single frame construction

Various Applications

Glass
Compost
Plastics
Rubber
Gravel
Mixed Material

ANDELA PRODUCTS

493 State Route 28
Richfield Springs, NY 13439
Phone: (315) 858-0055 x 1
Fax: (315) 858-2669

www.andelaproducts.com
info@andelaproducts.com

ANDELA Products
493 State Route 28 · Richfield Springs, NY · PHONE: (315) 858-0055 · FAX: (315) 858-2669
website: www.andelaproducts.com email: info@andelaproducts.com

ANDELA TROMMEL SEPARATOR
MODEL ATROM-104

MACHINE SPECIFICATIONS

Screen Sizes

Screen Size ..... 2” screen opening or to specification
.....48” OD x 10’ long

Categories of Separation

2" minus– glass gravel/sand (or to specification)
2” plus – Non-glass residue

Features

Overall Length ..... Approx. 16 ft
Overall Width ..... Approx. 6 ft
Enclosure ..... Complete Sheet Metal Enclosure
..... Hinged Service Door for Screen & Brushes
Screen Barrel Diameter and Length ..... 48” x 11ft
Screen Type ..... Stainless Steel Woven Wire
Rotating Brushes ..... (2) - 7” diameter
Maintenance Features ..... Central lubrication Block, External Mount

Drive Componentry

Motor Size ..... (1) 5 hp
Direct Drive System ..... Totally Enclosed Gear Reducer
..... Flexible Mount

Electrical

Motor Voltage .....230/460 VAC,60 HZ, 3 Phase

The manufacturer reserves the right to change designs
and specifications without notice.
2-1-15

ANDELA Products

Andela Conveyors

Width Options:
18”, 24”, 30” & 36”

Options for length, bed type, & pans or covers.

Stainless steel section available

Conveyor Types:
Slider Bed
Troughing Roll
Box Wall
Side Wall

Belt Tread Type:
Cleated belt
Smooth belt
Chevron belt

ANDELA PRODUCTS

493 State Route 28
Richfield Springs, NY 13439

Phone: (315) 858-0055
Fax: (315) 858-2669

www.andelaproducts.com
info@andelaproducts.com

- The Andela Conveyors are provided to safely convey the whole material into our systems.
- Available in many sizes and configurations to fit your system needs.
- Remote grease fittings and lines extend to base of conveyor for ease of maintenance

- **Increases production**
- **Heavy duty construction**

ANDELA Products
493 State Route 28 · Richfield Springs, NY · PHONE: (315) 858-0055 · FAX: (315) 858-2669
website: www.andelaproducts.com email: info@andelaproducts.com

ANDELA SYSTEM CONVEYORS
MACHINE SPECIFICATIONS

Heavy Duty – Troughing

Overall Length/Width	According to Quotation
Drive System	3-phase motor and gear reducer, direct drive
Conveyor Body	10” x 3/16” formed steel channels
Carry Surface:	Troughing Roller
Belt	Smooth, chevron, or cleated rubber belt
Head Pulley	10” head pulley
Tail Pulley	10” self cleaning tail pulley
Take Up	Adjustable Side Mounted bearings with 1 15/16” bore.
Returns	Return rolls with smooth and chevron belts Belly pans with wear resistant glides for cleated belt
Hopper/Sides	Formed 10 gauge painted steel

The manufacturer reserves the right to change designs
and specifications without notice.

ANDELA Products 493 State Route 28 · Richfield Springs, NY · PHONE: (315) 858-0055 · FAX: (315) 858-2669
website: www.andelaproducts.com email: info@andelaproducts.com

Electrical Control Panel

Enclosures - Enclosures are rated per the environment and are NEMA 4 or better. All enclosures are supplied with an emergency stop.

Main Disconnect - The main disconnect is provided with fuses or a circuit breaker and has a "Lockout/Tag out" feature.

Motor Starters - The motor starters are IEC rated.

Variable Speed Drives – Optional Variable speed drives can be provided and are internally protected for shorts and overloads.

Branch Circuit Protectors - The Branch circuit protectors are provided with a circuit breaker and a motor overload as an integral part of the unit.

Enclosure Heaters – Optional Heaters are provided for cold weather applications.

Push Buttons - All push buttons are Heavy Duty dust tight/water tight design

Standards - Built to UL-508 Industrial Standards. Electrical schematics and parts lists are supplied with the unit when the whole system is shipped.